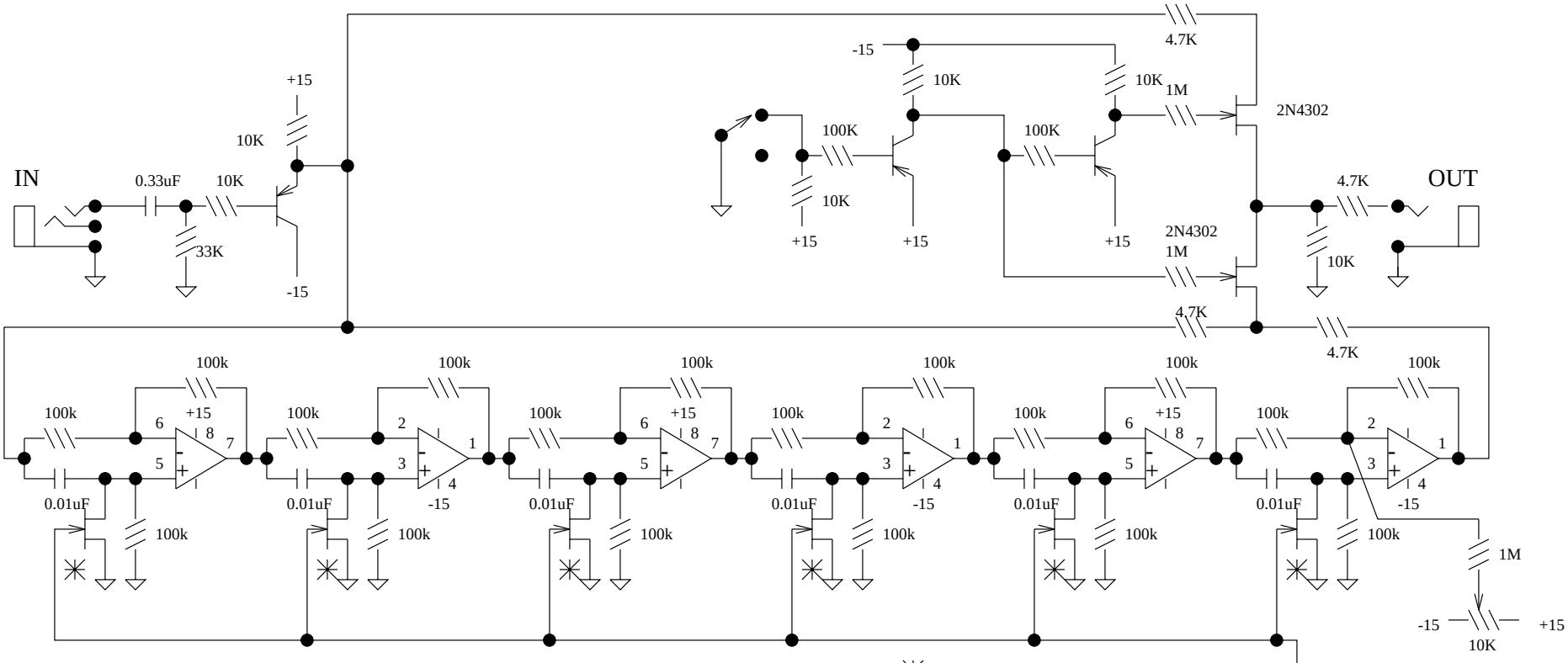

Oberheim PS-1 Phase Shifter

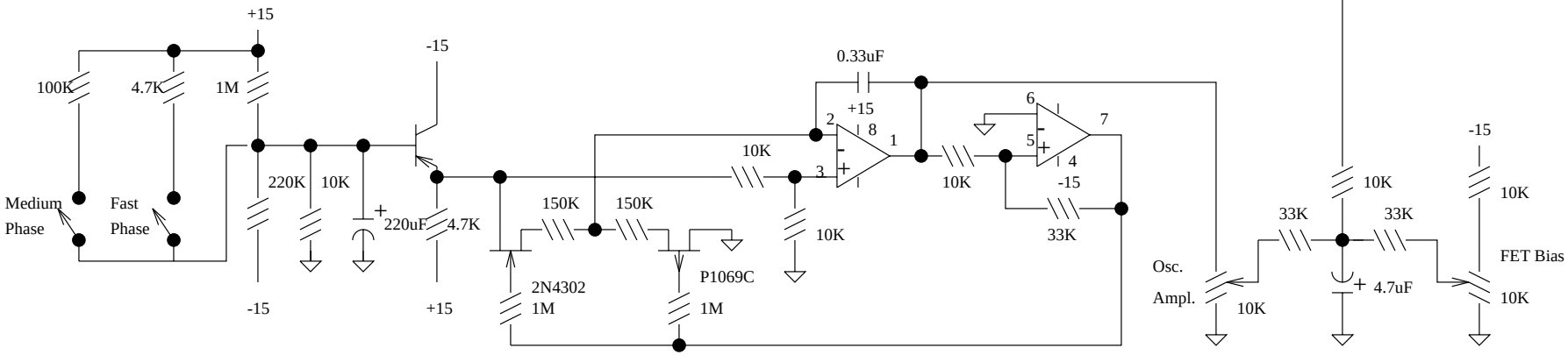

All IC's are 1458 dual op amp. All bipolars are 2N3638A.

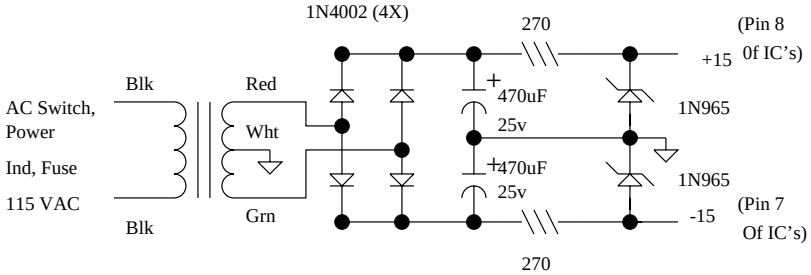

Adjustment procedure:

1. FET Bias: With Osc.Ampl. trimmer fully counterclockwise, adjust FET Bias so that audibile phasing sound is in the middle of its range.
2. Osc. Ampl.: Adjust for desired depth of phasing sound.
3. Output Offset: adjust for minimum "click" when Off/Slow Phase switch is operated.